AZYMUT

WIRELESS GATE STATE SENSOR
Installation and operating manual

v.1.5

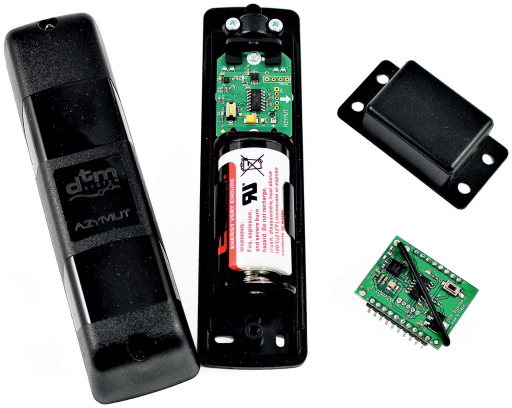

www.dtm.pl

WARNING ! ! !

The set includes a neodymium magnet that generates a very strong magnetic field.

Neodymium magnets, due to their strong magnetic field, should not be close to any kind of data carriers and electronic and electrical equipment as well as RTV and household appliances.
In particular, **NEVER APPROACH** devices such as:
(hard drives, payment cards, hotel cards, code cards, other, floppy disks and other storage media, audio and video cassettes, CD / DVD players, modern displays, GSM phones and tablets, laptops and computers, remote control and access control transmitters, monitors and TV sets, **medical devices for measuring and functional and life support functions - e.g. pacemakers,** ventilators and other electronic devices.

The magnet should not be close to any kind of measuring devices, as it may disrupt the correct operation of the measuring device and cause irreversible undesirable faults in it.

If you are not sure whether a neodymium magnet can be attached to a particular device, please refer to the instructions supplied with the device or contact the manufacturer of the equipment.

GENERAL INFORMATION

Azymut is a wireless, magnetic gate state sensor designed to work with a FLEX receiver.

MODULES AND TECHNICAL DATA

Azymut consists of three modules:

AZ-TX transmitter

for mounting on the gate

frequency:	channel 1 - 868.45MHz, channel 2 - 868.31MHz, channel 3 - 868.18MHz
power supply:	battery 3,6V/8,5Ah, type C
assembly:	surface-mounted, splash-proof housing, Ip54
dimensions:	38x38x145mm
temperature (min./max.):	-20°C / +55°C

AZ-FLEXRX receiving module

for mounting in the FLEX receiver connector

dimensions:	36x27x18mm
frequency:	channel 1 - 868.45MHz, channel 2 - 868.31MHz, channel 3 - 868.18MHz
power supply:	from FLEX receiver connector
antenna:	wire, 868MHz

AZ-MG magnet

strong neodymium magnet for mounting on the gate

dimensions:	33x62x20mm

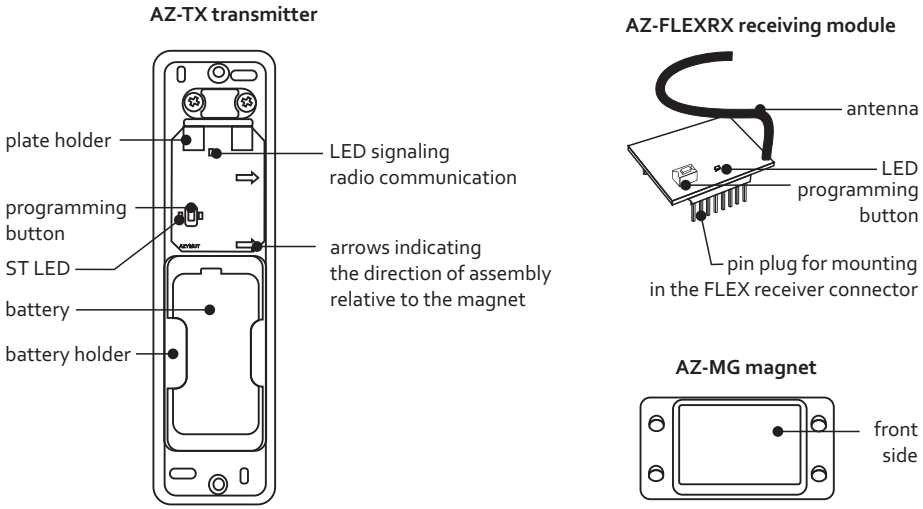

Fig. 1 View of the Azymut sensor modules with the description of the elements.

MONTAGE

The AZYMUT sensor is designed to work with the FLEX receiver. It can be mounted on gates of any type.

The distance between the AZ-MG magnet and the AZ-TX transmitter with the gate closed should be in the range of 1-30 cm

Pay attention to the arrows on the AZ-TX transmitter board!
The AZ-TX transmitter must be mounted perpendicular with the arrows pointing to the front wall of the AZ-MG magnet when the gate is closed. If necessary, reverse the fixing of the plate in the transmitter housing (Fig.2).

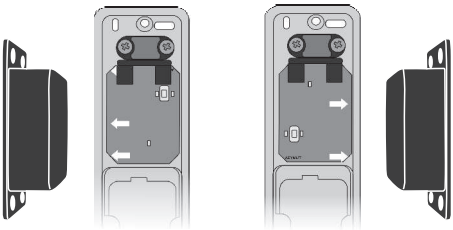

Fig.2 Mounting the AZ-TX transmitter relative to AZ-MG magnet.

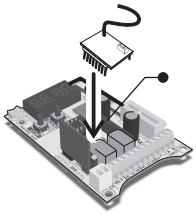

Fig.3 Installation of the AZ-FLEXRX receiving module in the FLEX receiver.

Installation of the Azymut sensor in various types of gates:

Garage door

1. Mount the AZ-FLEXRX receiving module in the FLEX receiver (Fig. 3). Set the input in the signaling mode in the FLEX receiver menu - 'Sr.St = on' option (see the FLEX receiver manual).
2. Mount the AZ-MG magnet on the gate and the AZ-TX transmitter on the wall (or vice versa) in such a way that the magnet and the transmitter are on one level when the gate is closed (Fig. 4).

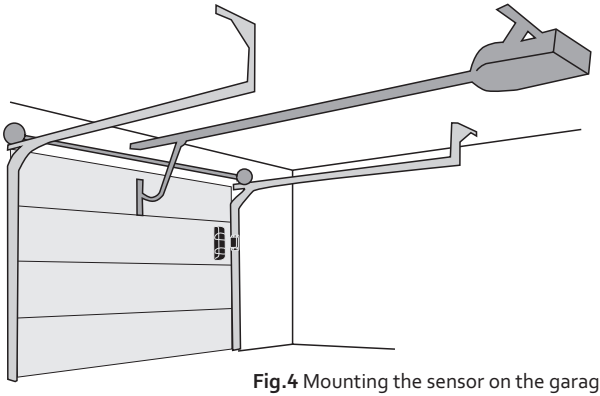

Fig.4 Mounting the sensor on the garage door.

One-leaf gate

1. Mount the AZ-FLEXRX receiving module in the FLEX receiver (Fig. 3). Set the input in the signaling mode in the FLEX receiver menu - 'Sr.St = on' option (see the FLEX receiver manual).
2. Mount the AZ-MG magnet on the post, AZ-TX transmitter on the gate wing (or vice versa), in such a way that the magnet and the transmitter are opposite each other when the gate is closed (Fig.5).

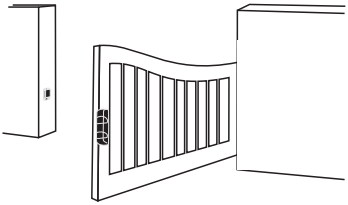

Fig.5 Mounting the sensor on the one-leaf gate.

Double leaf gate

1. Mount the AZ-FLEXRX receiving module in the FLEX receiver (Fig. 3). Set the input in the signaling mode in the FLEX receiver menu - 'Sr.St = on' option (see the FLEX receiver manual).
2. Mount the AZ-MG magnet on the one leaf, the AZ-TX transmitter on the second gate leaf, in such a way that the magnet and the transmitter are facing each other when the gate is closed (Fig.6).

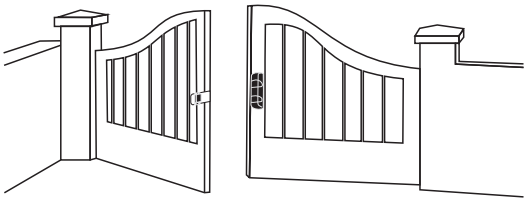

Fig.6 Mounting the sensor on the double leaf gate.

Sliding gate

1. Mount the AZ-FLEXRX receiving module in the FLEX receiver (Fig. 3). Set the input in the signaling mode in the FLEX receiver menu - 'Sr.St = on' option (see the FLEX receiver manual).
2. Mount the AZ-MG magnet on the post, AZ-TX transmitter on the gate (or vice versa), in such a way that the magnet and the transmitter are opposite each other when the gate is closed (Fig.7).

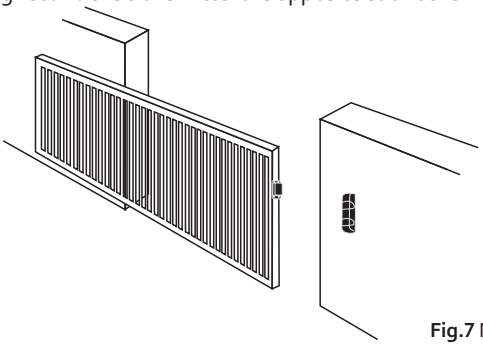

Fig.7 Mounting the sensor on the sliding gate.

Do not mount the transmitter in places exposed to magnetic fields from a source other than a dedicated magnet. If the LED in the AZ-FLEXRX module changes state several times during gate movement, install the magnet and / or transmitter in a different place. Probably the metal elements weaken the magnetic field in the vicinity of the magnet.

SENSOR LAUNCH

After mounting the transmitter and magnet on the gate, it is necessary to calibrate the AZ-TX transmitter and pair it with the AZ-FLEXRX receiving module in the FLEX receiver.

1. Calibration of the AZ-TX transmitter
- close the gate
- briefly press the transmitter button - the "ST" LED will flash
- open and close the gate once
- press the AZ-TX transmitter button again shortly - the "ST" LED will blink rapidly indicating the success of the operation.

If the "ST" LED generates 2 pulses, the calibration procedure failed. The reason may be too much distance between the AZ-MG magnet and the AZ-TX transmitter or too small difference in the open and closed distance. Correct the assembly and repeat the calibration procedure.

2. Pairing the transmitter with the FLEX receiver
- press the button on the AZ-FLEXRX module in the FLEX receiver - the diode will start to flash,
-open and close the gate - the diode will start to blink rapidly indicating the success of the operation. Pairing can take place a few seconds after the opening of the gate.

3. Control of the sensor's operation.
When the gate is closed, the LED in the AZ-FLEXRX module in the FLEX receiver should be on. When the gate is not closed, the LED should be off.

If the diode in the AZ-FLEXRX module blinks shortly every 5 seconds, it indicates a weak battery in the AZ-TX transmitter paired with it.
If the diode in the AZ-TX transmitter generates 5 pulses, it may mean a low battery or damage of the transmitter. Replace the battery. If the problem recurs despite the battery replacement, please send the device for service.

PRESENTATION OF THE GATE STATE

Appropriate mounting of the AZYMUT sensor allows you to check the gate state on a mobile device or computer.
The status of the gate is visible after adding a FLEX receiver, equipped with an WL card, to the CloudFlex account (www.cloudflex.dtm.pl), and in the V-PILOT mobile application available for Android and iOS devices.

There is a version of the Azymut sensor equipped with a Bluetooth module. The producer provides the API for further implementation in order to connect to the device from the external application level.

CHANGING THE RADIO CHANNEL OF TRANSMITTER - RECEIVER COMMUNICATION

The set communicates with each other on one of three frequencies. In the case of work in the vicinity of several sets of transmitter - receiver, for operational reliability, it is recommended to set a different radio channel for communication between the transmitter and the receiver in each set.

To change the radio channel:
- press and hold the button on the AZ-TX transmitter, release the button when the "ST" LED starts blinking,
- the "ST" diode generates 1, 2 or 3 pulses, simultaneously indicating the number of the radio channel that is currently used,
- briefly press the button on the AZ-TX transmitter to change the radio channel,
- press and hold the button on the AZ-TX transmitter to confirm the channel selection. The diode will blink, signifying the success of the operation,
- in the same way, change the radio channel in the AZ-FLEXRX receiver module installed in the FLEX receiver.

The channels set in the AZ-FLEXRX module and in the AZ-TX transmitter must be identical.

FORMAT OF THE AZ-FLEXRX RECEIVING MODULE

To format the AZ-FLEXRX module, press and hold the button for 15 seconds. The diode will first display the channel number currently set and then it will blink and go off. The button should be released after the diode goes out.

Formatting the module causes:
- removing the transmitter from memory,
- restoration of radio channel No. 1.

PACKAGE CONTENTS

- AZ-TX transmitter
- AZ-FLEXRX receiving module
- AZ-MG magnet
- 3.6V / 8.5Ah battery, type C
- set of 4 mounting pins
- Installation and operating instructions

DISPOSAL

Electrical or electronic equipment can not be disposed of with household waste. The correct disposal of the device gives the possibility to preserve the Earth's natural resources for longer and prevents degradation of the natural environment.

WARRANTY

The manufacturer DTM System provides the devices that are operational and ready for use. The warranty is granted for a period of 30 months from the date of sale by the manufacturer. The warranty period is determined based on the manufacturer's warranty seals identifying the production batch, placed on each product. To recognize the warranty, it is necessary to present a sales document. The manufacturer undertakes to repair the device free of charge if there are defects due to the manufacturer's fault during the warranty period. The defective device must be delivered to the place of purchase, including a copy of the proof of purchase and a brief, unambiguous description of the damage. The cost of disassembly and assembly of the device is borne by the user. The warranty does not cover batteries in remote controls, any damage resulting from improper use, unauthorized adjustments, alterations and repairs, and damage caused by lightning, overvoltage, or short circuit of the power supply network. The detailed terms and conditions of granting a guarantee are regulated by relevant legal acts.

CE DTM System hereby declares that the device complies with Directive 2014/53 / EU. The full text of the EU Declaration of Conformity is available at www.dtm.pl.

DTM System
ul. Brzeska 7, 85-145 Bydgoszcz, Polska, tel. +48 52 340 15 83, **www.dtm.pl**